Diaphragm pressure gauge with limit switch type 5293

Stainless steel case with bayonet ring, nominal size 100 mm, optional 160 mm
Horizontal diaphragm, process connection: stainless steel G1/2, optional coated with PTFE
Switching contacts for system control

Made in Germany

Pressure mechanical

>> Measuring principle:
Diaphragm screwed between 2 flanges

>> Application
This diaphragm pressure gauge is well suited for use in industrial production plants where the positive or negative overpressure of gaseous or liquid media is to be measured.
For viscous or contaminated media open connection flanges are used, for aggressive media the design should be in stainless steel.
The high quality stainless steel chemical bayonet ring case is particularly suitable for applications where case sealing is important (e.g. outdoor installations). For outdoor applications, a housing filling is recommended to prevent condensation.
This high-quality pressure gauge offers high reliability and a long service life.

The installation of a limit switch enables the switching of circuits for plant control at the same time as the local pressure display.

Please check the following technical specifications to determine whether this product is suitable for your specific application. If you have any questions, please do not hesitate to contact us

Diaphragm pressure gauge Type 5293, nominal size 100 mm
CrNi steel case, chemical version,
Horizontal diaphragm, optional coated with PTFE
shown here: 5293044-I21-PTFE-S
with extended tube for temperatures up to 110°C, inductive switch contact

BMG-Baumgart GmbH & Co. KG Mess- und Regeltechnik
An der Bega 28 · 32657 Lemgo · Tel.: 0 52 61 / 25 81-0 · Fax: 0 52 61 / 25 81-33 · vertrieb@bmg-baumgart.de · www.bmg-baumgart.de

Diaphragm pressure gauge with limit switch type 5293

Stainless steel case with bayonet ring, nominal size 100 mm, optional 160 mm
Horizontal diaphragm, process connection: stainless steel G1/2, optional coated with PTFE
Switching contacts for system control

Pressure mechanical

>> Design
according to EN 837-3, accuracy class 1.6 (coated with PTFE 2.5)
IP 54 (with case filling IP65)

>> Case with upper measuring flange
Nominal size Ø 100 mm, bayonet ring: CrNi-steel, optional Ø 160 mm (type 5303)
With blow-out device in case back
upper measuring flange CrNi-steel
Optional with case filling (type 5293oe)

>> window
Laminated safety glass

>> dial
Aluminium, white, scale black

>> pointer
Instrument pointer: Aluminium, black
Set pointer: red

>> upper measuring flange
Scale range 0 ... 40 mbar to 0 ... 250 mbar: flange Ø 160 mm
Scale range 0 ... 400 mbar to 0 ... 25 bar: flange Ø 100 mm

>> scale range

	Optional
0…+ 40 mbar	
0…+ 60 mbar	
0…+100 mbar	-1… 0 bar
0…+160 mbar	-1… +0,6 bar
0…+250 mbar	-1… +1,5 bar
0...+ 0,6 bar	-1… +3 bar
0...+ 1,0 bar	-1… +5 bar
0...+ 1,6 bar	-1… +9 bar
0...+ 2,5 bar	-1…+15 bar
0...+ 4,0 bar	
0...+ 6,0 bar	
0...+10 bar	
0...+16 bar	
0...+25 bar	

Note:

Temperature:	
ambient:	-20…+60°C
medium :	max. +100°C
	(optional with extension tube max. 200°C)
Pressure limitation:	
steady:	3/4x full scale
fluctuating:	2/3x full scale,
short time	Overpressure, up to 5 times overrange protected**, max. 40 bar**

>> Process connection with lower measuring flange
CrNi-steel 316L, drilling Ø 7mm, optional PTFE lining (enlarged drilling required)
G 1/2 bottom connection

>> electrical connection
Cable socket, fitted on the right-hand side of the case
M20 x 1.5

>> inductive limit switches (Please refer to the pin assignment on the side meter label)
Optional magnetic spring contacts, electronic or pneumatic limit switches
max. 3 Switch contact per measuring instrument
Note: Additional control unit required

>> Optionen
PTFE-lining(enlarged drilling required)
Note: with PTFE lining, appropriate safety measures may have to be taken to prevent electrical charges,
Open connection flange
High temperature design (extension tube)

BMG-Baumgart GmbH & Co. KG Mess- und Regeltechnik
An der Bega 28 · 32657 Lemgo · Tel.: 0 52 61 / 25 81-0 · Fax: 0 52 61 / 25 81-33 · vertrieb@bmg-baumgart.de · www.bmg-baumgart.de

Diaphragm pressure gauge with limit switch type 5293

Stainless steel case with bayonet ring, nominal size 100 mm, optional 160 mm
Horizontal diaphragm, process connection: stainless steel G1/2, optional coated with PTFE
Switching contacts for system control

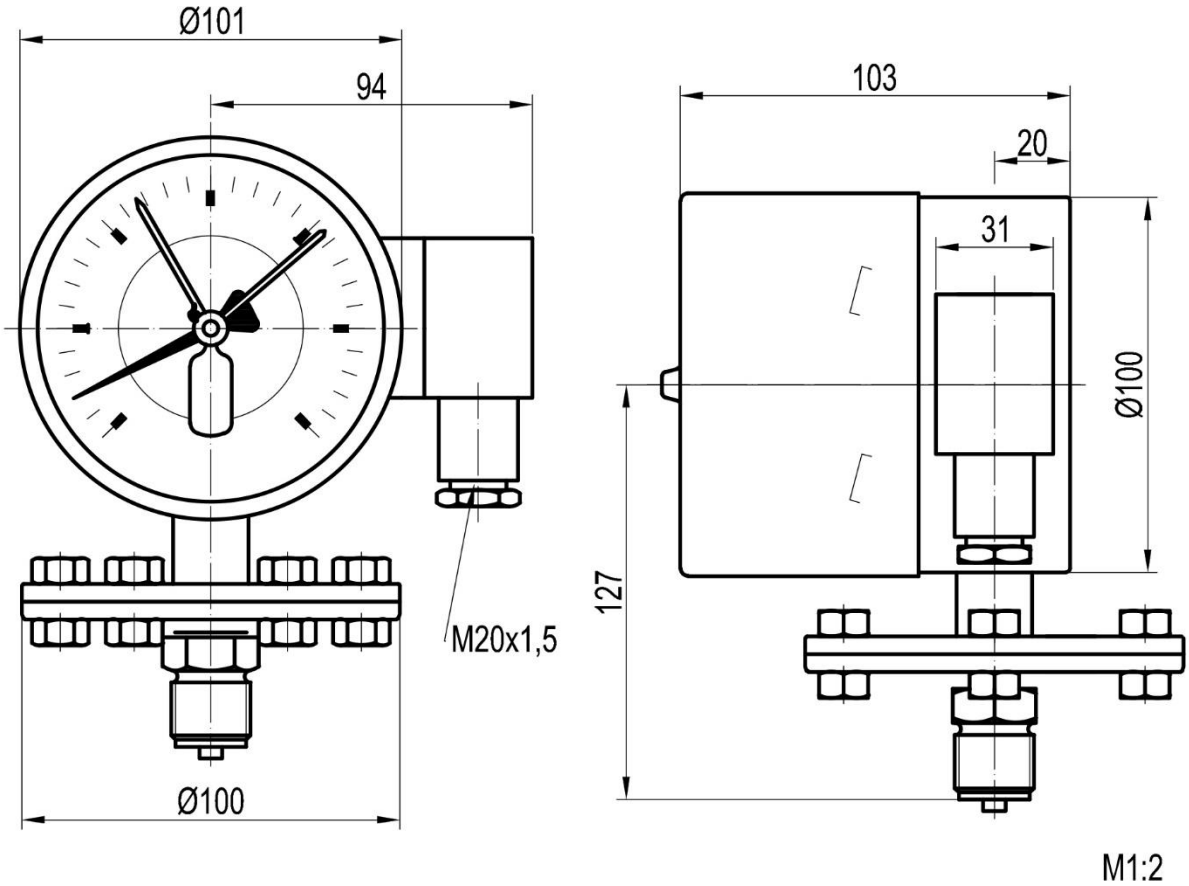

Front view

Lateral view

Diaphragm pressure gauge, type 5293 with side cable socket

Notes: For PTFE lining and enlarged channel: without sealing pin

for temperatures > 100°C extension tube required,

BMG-Baumgart GmbH & Co. KG Mess- und Regeltechnik
An der Bega 28 · 32657 Lemgo · Tel.: 0 52 61 / 25 81-0 · Fax: 0 52 61 / 25 81-33 · vertrieb@bmg-baumgart.de · www.bmg-baumgart.de

Stainless steel case with bayonet ring, nominal size 100 mm, optional 160 mm
Horizontal diaphragm, process connection: stainless steel G1/2, optional coated with PTFE
Switching contacts for system control

Diaphragm pressure gauge, Type 5293: Complement to switch contacts
inductive limit switch
Optional magnetic spring contacts, electronic or pneumatic limit switches

In our diaphragm pressure gauge with inductive limit switch (Type 5293), the pressure is displayed in analog form and, at the same time, limit values can be set and monitored by means of contacts (switches).
The instrument pointer shows the actual pressure value analogously, the limit values are set via the (red) set pointer (set pointer - removable adjustment key in the sight glass).
If the set limit values are reached, i.e. if the instrument pointer exceeds or falls below the setpoint pointer, the contacts switch, i.e. a circuit is opened or closed and can thus be used for plant control.

The used inductive limit switch can have 1-2 contacts.
The setting range for the contacts is 10-90 % of the scale range.

The code number 1 or 2 of the contact indicates the switching function of the switch
1: with clockwise pointer movement, closing with increasing pressure - normally open contact
2: with clockwise pointer movement, opening with increasing pressure - normally closed contact

With 2 contacts, the following combinations are possible, here using the example of inductive contacts

I-11 Hz	83.11	1st and 2nd contact closing when the limit value is exceeded
I-12 Hz	83.12	1st contact closes, 2nd contact opens when the limit value is exceeded
I-21 Hz	83.21	1st contact opens, 2nd contact closes when the limit value is exceeded
I-22 Hz	83.22	1st and 2nd contact open when limit value is exceeded

Technical data (inductive contacts)

Nominal voltage	8 V DC
Operating voltage	5 - 25 V
Current consumption	max. 3 mA
Switching accuracy	≤ 1.5x Accuracy class
Ambient temperature	-20° C to +70° C
Setting range	280° max.
Regulations	EN 60947-5-2
Switching hysteresis (switching pressure reversal span)	≤ accuracy class

Note: Please observe the pin assignment on the side label of the encoder.

Diaphragm pressure gauge with limit switch type 5293

Stainless steel case with bayonet ring, nominal size 100 mm, optional 160 mm
Horizontal diaphragm, process connection: stainless steel G1/2, optional coated with PTFE
Switching contacts for system control

>>Ordering code for stainless steel diaphragm pressure gauges with inductive limit switch (2 contacts) with PTFE lining

5	2	9	3				-	I			-	P	T	F	E		

1. scale range

0…+ 40 mbar	061
0…+ 60 mbar	062
0…+100 mbar	063
0…+160 mbar	064
0…+250 mbar	065
0...+ 1,0 bar	069
0...+ 1,6 bar	070
0...+ 2,5 bar	072
0...+ 4,0 bar	073
0...+ 6,0 bar	074
0...+10 bar	075
0...+16 bar	076
0...+25 bar	078
Optional	
-1… 0 bar	016
-1… +0,6 bar	042
-1… +1,5 bar	043
-1… +3 bar	044
-1… +5 bar	045
-1… +9 bar	046
-1…+15 bar	049
Other on request please specify in plain text	xxx

2. inductiv switch contact

I-11 Hz	11
I-12 Hz	12
I-21 Hz	21
I-22 Hz	22

3. Options

without	leer
Other on request	S

Please fill in all empty fields of the order key. Please see above for the corresponding key figures. Options are possible on request. Please specify them in plain text.

Ordering example
5293044- I21-PTFE
Diaphragm pressure gauge with inductive limit switch, NG Ø 100 mm (Type 5293), switching contacts I-21 Hz, PTFE lining, scale range -1...+3 bar

>> Certificates on request
Factory test certificate with 5 test points
DAkkS
3.1 for the material according to EN 10204

>> Weight: ca. 4 kg

BMG-Baumgart GmbH & Co. KG Mess- und Regeltechnik
An der Bega 28 · 32657 Lemgo · Tel.: 0 52 61 / 25 81-0 · Fax: 0 52 61 / 25 81-33 · vertrieb@bmg-baumgart.de · www.bmg-baumgart.de